Space-saving design light short tie rod hydraulic cylinders for 16 MPa

- Compact double acting hydraulic cylinders for 16 MPa having bores of 32 to 160 mm.
- The cylinders are interchangeable with a part of 160S-1 Series 16 MPa compact design cylinders. They are as space-saving as and lighter than the compact design cylinders.
- ST style cylinders with large bores of 100 to 160 mm (not included in 160S-1 Series) are available.
  Light, compact and space-saving design, and remarkably reduced production leadtime.

Standard Specifications

Type	Standard type, Switch Set
Nominal pressure	16 MPa
Maximum allowable pressure	16 MPa
Proof test pressure	24 MPa
Minimum operating pressure	0.3 MPa or less
Working speed range	8 to 100mm/s
Working temperature range (ambient temperature)	Standard type ····· −10 to +120℃ Switch Set AX/AZ type ····· −10 to +70℃ (No freezing)
Structure of cushioning	None
Applicable fluid	Petroleum-based fluid (When using another fluid, refer to the table of fluid adaptability.)
Tolerance for thread	JIS 6g/6H
Tolerance of stroke	0 to 0.8mm
Tube material	Standard type ····· ● Carbon steel for machine structural use Switch Set ····· ● Stainless steel
Mounting style	SA, SB, EA, EB, FA, FB, LD
Seal material	6 HNBR
Rod end thread	Male thread

Adaptability of Fluid to Seal Material

Seal material	Applicable fluid				
	Petroleum-based fluid	Water-glycol fluid	Phosphate ester fluid	Water in oil fluid	Oil in water fluid
6 HNBR	○	○	×	○	○

Terminologies

Nominal pressure
Pressure given to a cylinder for convenience of naming.
It is not always the same as the working pressure (rated pressure) that guarantees performance under the specified conditions.

Maximum allowable pressure
Maximum allowable pressure generated in a cylinder (surge pressure, etc.).

Proof test pressure
Test pressure against which a cylinder can withstand without unreliable performance at the return to nominal pressure.

Minimum operating pressure
Minimum pressure at which cylinder installed horizontally operates under no load.

Notes)
- The hydraulic pressure generated in a cylinder due to the inertia of load must be lower than the maximum allowable pressure.
- This series of cylinders does not have air vents.
- Since side load (eccentric load) must not be applied to the piston rod, take care when installing the cylinder.

Product Lineup

Unit: mm

Series Variation	Type	Mounting Style	φ32	φ40	φ50	φ63	φ80	φ100	φ125	φ140	φ160
General purpose type / Double acting single rod	Standard type 160ST-1	SA	●	●	●	●	●	●	●	●	●
		SB	●	●	●	●	●	●	●	●	●
		EA	●	●	●	●	●	●	●	●	●
		EB	●	●	●	●	●	●	●	●	●
		FA	●	●	●	●	●				
		FB	●	●	●	●	●				
		LD	●	●	●	●	●				
	Switch Set 160ST-1R	SA	●	●	●	●	●	●	●	●	●
		SB	●	●	●	●	●	●	●	●	●
		EA	●	●	●	●	●	●	●	●	●
		EB	●	●	●	●	●	●	●	●	●
		FA	●	●	●	●	●				
		FB	●	●	●	●	●				
		LD	●	●	●	●	●				

Notes)
- When using a sensor, use a Switch Set Cylinder.
- No sensor can be mounted onto the standard type cylinder.

Double acting single rod

Standard type(160ST-1)

Switch Set(160ST-1R)

Stroke Range

Unit: mm

Bore	SA/SB style Stroke 1 to 100	SA/SB style Stroke 101 to 300	EA/EB style Stroke 1 to 100	EA/EB style Stroke 101 to 300	FA/FB/LD style Stroke 1 to 100	FA/FB/LD style Stroke 101 to 300
φ32	□	○	□	○	□	○
φ40	□	○	□	○	□	○
φ50	□	○	□	○	□	○
φ63	□	○	□	○	□	○
φ80	□	○	□	○	□	○
φ100	□	○	□	○		
φ125	□	○	□	○		
φ140	○	○	○	○		
φ160	○	○	○	○		

Note)The appearance varies depending on the bore and mounting style. ○: Standard range □: Semi-standard range

● How to order

General Purpose Type

Type ❶ | Seal material ❷ | Mounting style ❸ | Cylinder bore ❹ | Cushioning ❺ | Stroke ❻ | Port position ❼ | Cushion ❽ | Sensor symbol ❾ | Sensor quantity ❿ | Lock nut ⓫

- ●Standard type 160ST-1 6 SA 63 N 200 – A 0 L
- ●Switch Set 160ST-1R 6 SA 63 N 200 – A 0 AF 2 L

Standard type
160ST-1 : Double acting single rod
Switch Set
160ST-1R: Double acting single rod

6 HNBR

SA Rod tapped hole type
SB Cap tapped hole type
EA Rod through hole type
EB Cap through hole type
FA Rod flange
FB Cap flange
LD Foot type

SA·SB·EA·EB: ϕ32 to ϕ160
FA·FB·LD : ϕ32 to ϕ80

No cushion

ϕ32 to ϕ125: Stroke 101 to 300
Cylinders with strokes of 100 mm or less are made to order.
Some short-stroke cylinders may not be installed satisfactorily.
ϕ140 and ϕ160: Stroke 1 to 300

Port position(A, B, C, D)

No cushion

Sensor symbol
See the Sensor List.
When no sensor is required, specify 0 for the sensor symbol.

0, 1, 2, to n
When no sensor is required, specify 0 for the sensor quantity.

L With one lock nut

* Male threaded rod end is standard.
* When using the lock nut, specify the rod screw length according to the screw fitting length.
For the recommended size, see the "Lock Nut" page.
* For the shape of rod end such as female threaded rod end, consult us.
* For the G thread port and air vent types, consult us.

✪ Standard specifications

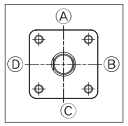

- ●No cushion on both sides
- ●Port position Ⓐ

✪ Modification of port position

The standard port position is Ⓐ. When modifying the position, enter the symbol shown in the dimensional drawing.

Example) 160ST-1 6SA63N200 – A 0 L
Port position(A, B, C, D) | No cushion

Note) For ϕ40 FB style cylinders, the port position B or D cannot be selected.

Mounting Style

SA Rod side tapped hole type

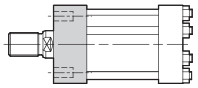

SB Cap side tapped hole type

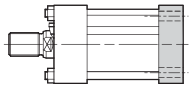

EA Rod side through hole type

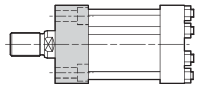

EB Cap side through hole type

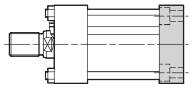

FA Rod rectangular flange

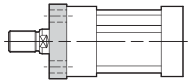

FB Cap rectangular flange

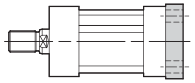

LD Foot type (side lugs)

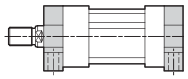

Sensor List

Type	Sensor symbol	Load voltage range	Load current range	Max. switching capacity	Protective circuit	Indicating lamp	Wiring method	Cord length	Applicable load
Reed sensor	AF AX101CE	DC:5 to 30V AC:5 to 120V	DC:5 to 40mA AC:5 to 20mA	DC:1.5W AC:2VA	None	LED (lights in red when sensing)	0.3 mm², 2-core, outer dia. ϕ4 mm, rear wiring	1.5m	Small relay programmable controller
	AG AX105CE							5m	
	AH AX111CE				Provided			1.5m	
	AJ AX115CE							5m	
	AE AX125CE	DC:30V or less AC:120V or less	DC:40mA or less AD:20mA or less		None	None		5m	
	AK AX11ACE	AC:5 to 120V	5 to 20mA	2VA	Provided	LED (lights in red when sensing)	4-pin connector type, rear wiring	0.5m	
	AL AX11BCE	DC:5 to 30V	5 to 40mA	1.5W				0.5m	
	AP AZ101CE	DC:5 to 30V AC:5 to 120V	DC:5 to 40mA AC:5 to 20mA	DC:1.5W AC:2VA	None	LED (lights in red when sensing)	0.3 mm², 2-core, outer dia. ϕ4 mm, upper wiring	1.5m	
	AR AZ105CE							5m	
	AS AZ111CE				Provided			1.5m	
	AT AZ115CE							5m	
	AN AZ125CE	DC:30V or less AC:120V or less	DC:40mA or less AD:20mA or less		None	None		5m	
	AU AZ11ACE	AC:5 to 120V	5 to 20mA	2VA	Provided	LED (lights in red when sensing)	4-pin connector type, upper wiring	0.5m	
	AW AZ11BCE	DC:5 to 30V	5 to 40mA	1.5W				0.5m	
	AM AX135CE	AC/DC:90 to 240V	5 to 300mA	B contact output	Provided	LED (lights in red when not sensing)	0.3 mm², 2-core, outer dia. ϕ4 mm, rear wiring	5m	
	AY AZ135CE						0.3 mm², 2-core, outer dia. ϕ4 mm, upper wiring	5m	
Solid state sensor	BE AX201CE-1	DC:5 to 30V	5 to 40mA	—	Provided	LED (lights in red when sensing)	0.3 mm², 2-core, outer dia. ϕ4 mm, rear wiring	1.5m	Small relay programmable controller
	BF AX205CE-1							5m	
	CE AX211CE-1					LED (two-LED type in red/green)		1.5m	
	CF AX215CE-1							5m	
	CH AX21CCE-1						4-pin connector type, rear wiring	0.5m	
	CJ AX21DCE-1							1m	
	BM AZ201CE-1					LED (lights in red when sensing)	0.3 mm², 2-core, outer dia. ϕ4 mm, upper wiring	1.5m	
	BN AZ205CE-1							5m	
	CM AZ211CE-1					LED (two-LED type in red/green)		1.5m	
	CN AZ215CE-1							5m	
	CT AX211CE-1						0.3 mm², 2-core, outer dia. ϕ4 mm, rear wiring	1.5m	
	CU AX215CE-1							5m	
	CV AX21BCE-1						4-pin connector type, rear wiring	0.5m	
	CW AZ211CE-1						0.3 mm², 2-core, outer dia. ϕ4 mm, upper wiring	1.5m	
	CX AZ215CE-1							5m	
	CY AZ21BCE-1						4-pin connector type, upper wiring	0.5m	

Notes)
- ●For the sensors without a protective circuit, be sure to provide a protective circuit (SK-100) with the load when using any induction load (relay, etc.).
- ●The output logic of AX and AZ135CE is B contact. When the piston is detected, the sensor contact turns off (the lamp turns on).
- ●We recommend AND Unit (AU series) for multiple sensors connected in series.

●Standard type
AX type (rear wiring) AZ type (upper wiring)

Unit: mm

SA/Rod side tapped hole type

160ST-1 6 SA Bore N Stroke – A 0

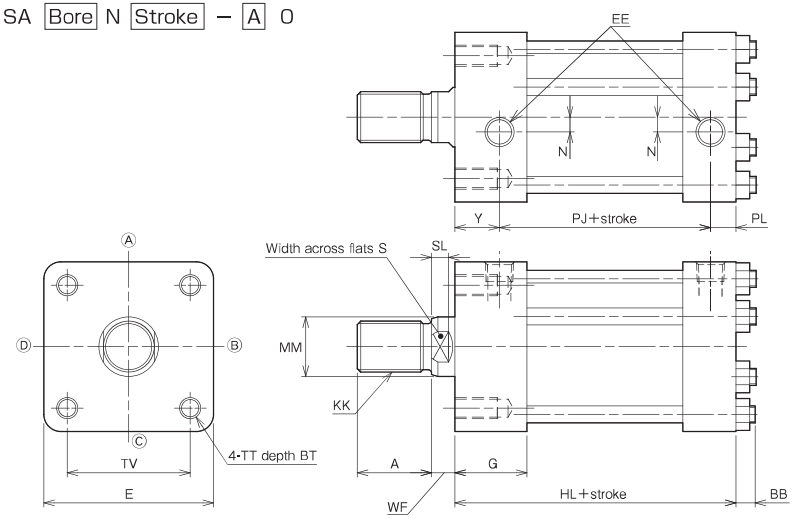

* The number and positions of tie rods vary depending on the bore.
* Since side load (eccentric load) must not be applied to the piston rod, take care when installing the cylinder.

Dimensional Table (SA/Rod side tapped hole type)

Symbol / Bore	A	BB	BT	E	EE	G	HL Standard type	HL Switch Set	KK	MM	N
φ32	25	0	15	□62	Rc1/4	34	81.5	88	M16×1.5	φ18	0
φ40	30	0	20	□70	Rc1/4	34	81.5	99	M20×1.5	φ22	7
φ50	35	0	34	□80	Rc1/4	34	82.5	98	M24×1.5	φ28	7
φ63	45	0	34	□94	Rc1/4	34	86	100	M30×1.5	φ36	0
φ80	60	0	39	□114	Rc3/8	39	101	118	M39×1.5	φ45	0
φ100	75	13	39	□140	Rc3/8	39	112	120	M48×1.5	φ56	0
φ125	95	14	39	□172	Rc1/2	39	121	135	M64×2	φ70	0
φ140	110	16	49	□196	Rc1/2	49	152	152	M72×2	φ80	0
φ160	120	18	49	□235	Rc1/2	49	159	159	M80×2	φ90	0

Symbol / Bore	PJ Standard type	PJ Switch Set	PL	S	SL	TT	TV	WF	Y
φ32	47.5	54	12	14	7	M6×1	□47	10	22
φ40	47.5	65	12	19	7	M8×1.25	□52	10	22
φ50	49.5	65	12	24	8	M10×1.5	□58	11	21
φ63	54	68	12	30	9	M12×1.75	□69	13	20
φ80	64	81	15	41	14	M16×2	□86	17	22
φ100	75	83	15	50	22	M18×2.5	□106	26	22
φ125	81	95	20	65	25	M22×2.5	□132	30	20
φ140	105	105	20	75	31	M24×3	□150	35	27
φ160	109	109	23	85	33	M27×3	□175	40	27

SB/Cap side tapped hole type

160ST-1 6 SB Bore N Stroke – A 0

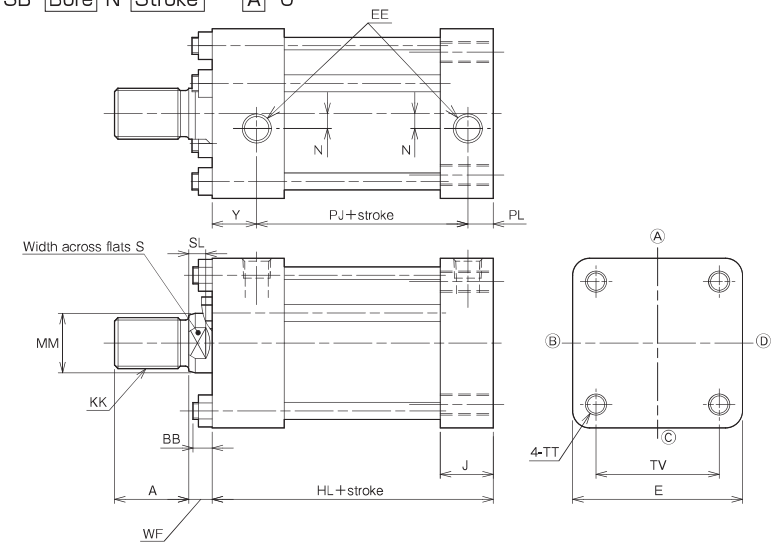

* The number and positions of tie rods vary depending on the bore.
* Since side load (eccentric load) must not be applied to the piston rod, take care when installing the cylinder.

Dimensional Table (SB/Cap side tapped hole type)

Symbol / Bore	A	BB	E	EE	HL Standard type	HL Switch Set	J	KK	MM	N
φ32	25	0	□62	Rc1/4	81.5	88	25	M16×1.5	φ18	0
φ40	30	0	□70	Rc1/4	81.5	99	25	M20×1.5	φ22	7
φ50	35	0	□80	Rc1/4	82.5	98	25	M24×1.5	φ28	7
φ63	45	0	□94	Rc1/4	86	100	25	M30×1.5	φ36	0
φ80	60	0	□114	Rc3/8	101	118	33	M39×1.5	φ45	0
φ100	75	13	□140	Rc3/8	112	120	33	M48×1.5	φ56	0
φ125	95	14	□172	Rc1/2	121	135	40	M64×2	φ70	0
φ140	110	16	□196	Rc1/2	152	152	40	M72×2	φ80	0
φ160	120	18	□235	Rc1/2	159	159	45	M80×2	φ90	0

Symbol / Bore	PJ Standard type	PJ Switch Set	PL	S	SL	TT	TV	WF	Y
φ32	47.5	54	12	14	7	M6×1	□47	10	22
φ40	47.5	65	12	19	7	M8×1.25	□52	10	22
φ50	49.5	65	12	24	8	M10×1.5	□58	11	21
φ63	54	68	12	30	9	M12×1.75	□69	13	20
φ80	64	81	15	41	14	M16×2	□86	17	22
φ100	75	83	15	50	22	M18×2.5	□106	26	22
φ125	81	95	20	65	25	M22×2.5	□132	30	20
φ140	105	105	20	75	31	M24×3	□150	35	27
φ160	109	109	23	85	33	M27×3	□175	40	27

EA/Rod side through hole type

160ST-1 6 EA Bore N Stroke − A 0

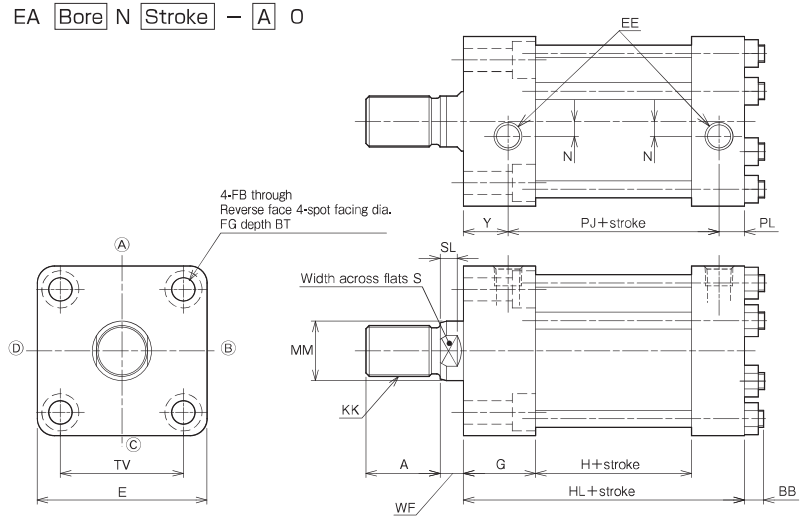

* The number and positions of tie rods vary depending on the bore.
* The cap covers of 140 and 160 mm bore cylinders have holes for mounting bolts.
* Since side load (eccentric load) must not be applied to the piston rod, take care when installing the cylinder.

Dimensional Table (EA/Rod side through hole type)

Symbol / Bore	A	BB	BT	E	EE	FB	FG	G	H		HL	
									Standard type	Switch Set	Standard type	Switch Set
ϕ32	25	0	6.5	□62	Rc1/4	6.6	11	34	22.5	29	81.5	88
ϕ40	30	0	8.6	□70	Rc1/4	9	14	34	22.5	40	81.5	99
ϕ50	35	0	10.8	□80	Rc1/4	11	17.5	34	23.5	39	82.5	98
ϕ63	45	0	13	□94	Rc1/4	14	20	34	27	41	86	100
ϕ80	60	0	15.2	□114	Rc3/8	16	23	39	29	46	101	118
ϕ100	75	13	19.5	□140	Rc3/8	20	29	39	40	48	112	120
ϕ125	95	14	23.5	□172	Rc1/2	24	35	39	42	56	121	135
ϕ140	110	16	25.5	□196	Rc1/2	26	39	49	63	63	152	152
ϕ160	120	18	29	□235	Rc1/2	30	43	49	65	65	159	159

Symbol / Bore	KK	MM	N	PJ		PL	S	SL	TV	WF	Y
				Standard type	Switch Set						
ϕ32	M16×1.5	ϕ18	0	47.5	54	12	14	7	□47	10	22
ϕ40	M20×1.5	ϕ22	7	47.5	65	12	19	7	□52	10	22
ϕ50	M24×1.5	ϕ28	7	49.5	65	12	24	8	□58	11	21
ϕ63	M30×1.5	ϕ36	0	54	68	12	30	9	□69	13	20
ϕ80	M39×1.5	ϕ45	0	64	81	15	41	14	□86	17	22
ϕ100	M48×1.5	ϕ56	0	75	83	15	50	22	□106	26	22
ϕ125	M64×2	ϕ70	0	81	95	20	65	25	□132	30	20
ϕ140	M72×2	ϕ80	0	105	105	20	75	31	□150	35	27
ϕ160	M80×2	ϕ90	0	109	109	23	85	33	□175	40	27

EB/Cap side through hole type

160ST-1 6 EB Bore N Stroke − A 0

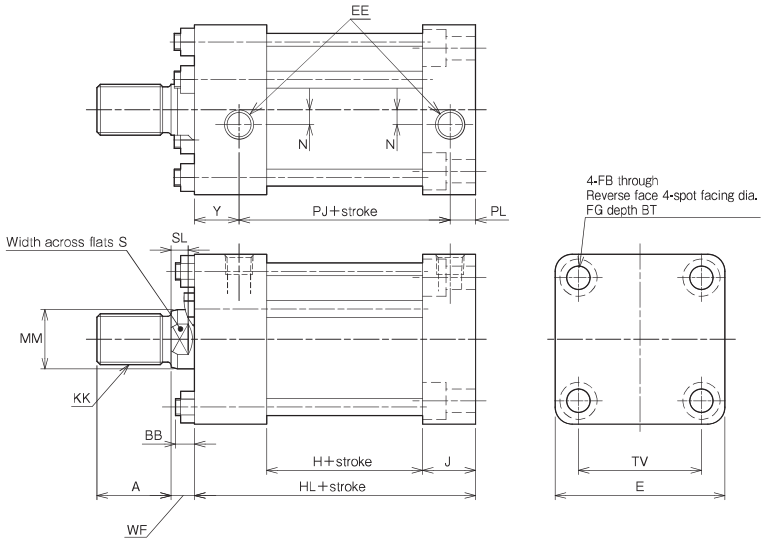

* The number and positions of tie rods vary depending on the bore.
* The cap covers of 140 and 160 mm bore cylinders have holes for mounting bolts.
* Since side load (eccentric load) must not be applied to the piston rod, take care when installing the cylinder.

Dimensional Table (EB/Cap side through hole type)

Symbol / Bore	A	BB	BT	E	EE	FB	FG	J	H		HL	
									Standard type	Switch Set	Standard type	Switch Set
ϕ32	25	0	6.5	□62	Rc1/4	6.6	11	25	22.5	29	81.5	88
ϕ40	30	0	8.6	□70	Rc1/4	9	14	25	22.5	40	81.5	99
ϕ50	35	0	10.8	□80	Rc1/4	11	17.5	25	23.5	39	82.5	98
ϕ63	45	0	13	□94	Rc1/4	14	20	25	27	41	86	100
ϕ80	60	0	15.2	□114	Rc3/8	16	23	33	29	46	101	118
ϕ100	75	13	19.5	□140	Rc3/8	20	29	33	40	48	112	120
ϕ125	95	14	23.5	□172	Rc1/2	24	35	40	42	56	121	135
ϕ140	110	16	25.5	□196	Rc1/2	26	39	40	63	63	152	152
ϕ160	120	18	29	□235	Rc1/2	30	43	45	65	65	159	159

Symbol / Bore	KK	MM	N	PJ		PL	S	SL	TV	WF	Y
				Standard type	Switch Set						
ϕ32	M16×1.5	ϕ18	0	47.5	54	12	14	7	□47	10	22
ϕ40	M20×1.5	ϕ22	7	47.5	65	12	19	7	□52	10	22
ϕ50	M24×1.5	ϕ28	7	49.5	65	12	24	8	□58	11	21
ϕ63	M30×1.5	ϕ36	0	54	68	12	30	9	□69	13	20
ϕ80	M39×1.5	ϕ45	0	64	81	15	41	14	□86	17	22
ϕ100	M48×1.5	ϕ56	0	75	83	15	50	22	□106	26	22
ϕ125	M64×2	ϕ70	0	81	95	20	65	25	□132	30	20
ϕ140	M72×2	ϕ80	0	105	105	20	75	31	□150	35	27
ϕ160	M80×2	ϕ90	0	109	109	23	85	33	□175	40	27

Unit: mm

FA/Rod rectangular flange

160ST-1 6 FA Bore N Stroke − A 0

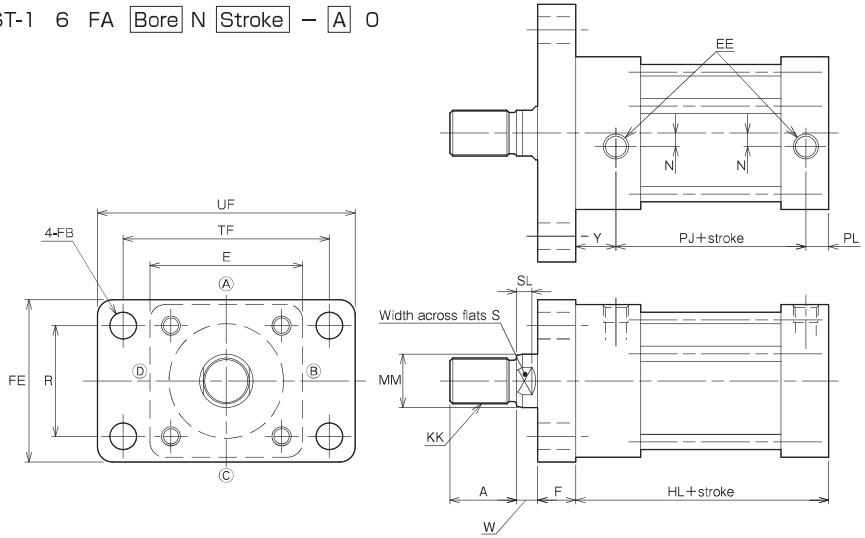

* The number and positions of tie rods vary depending on the bore.
* Since side load (eccentric load) must not be applied to the piston rod, take care when installing the cylinder.

Dimensional Table(FA/Rod rectangular flange)

Symbol / Bore	A	E	EE	F	FB	FE	HL Standard type	HL Switch Set	KK	MM	N
φ32	25	□62	Rc1/4	15	φ6.6	62	81.5	88	M16×1.5	φ18	0
φ40	30	□70	Rc1/4	20	φ11	70	81.5	99	M20×1.5	φ22	7
φ50	35	□80	Rc1/4	20	φ14	85	82.5	98	M24×1.5	φ28	7
φ63	45	□94	Rc1/4	20	φ14	98	86	100	M30×1.5	φ36	0
φ80	60	□114	Rc3/8	25	φ18	118	101	118	M39×1.5	φ45	0

Symbol / Bore	PJ Standard type	PJ Switch Set	PL	R	S	SL	TF	UF	W	Y
φ32	47.5	54	12	40	14	7	80	95	10	22
φ40	47.5	65	12	46	19	7	96	118	10	22
φ50	49.5	65	12	58	24	8	108	135	11	21
φ63	54	68	12	65	30	9	124	150	13	20
φ80	64	81	15	87	41	14	154	185	17	22

Unit: mm

FB/Cap rectangular flange

160ST-1 6 FB Bore N Stroke − A 0

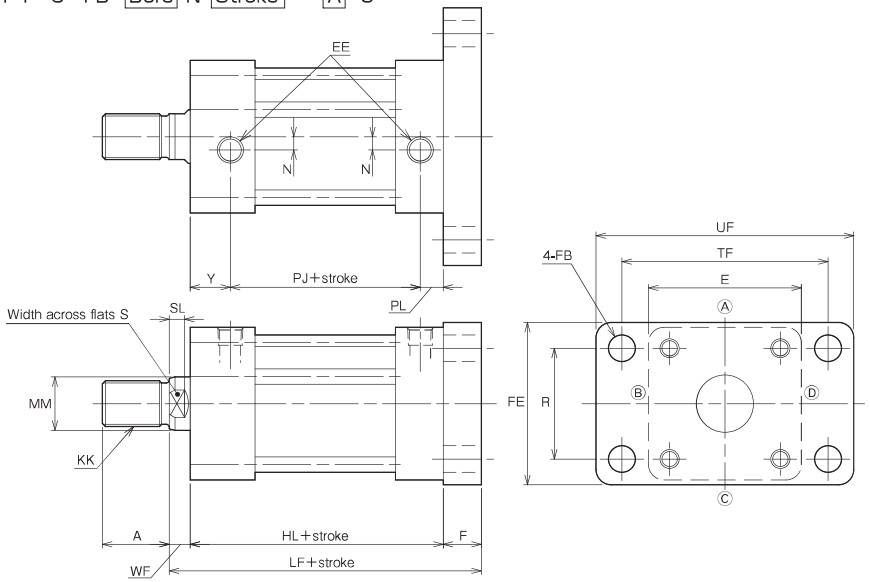

* The number and positions of tie rods vary depending on the bore.
* Since side load (eccentric load) must not be applied to the piston rod, take care when installing the cylinder.

Dimensional Table(FB/Cap rectangular flange)

Symbol / Bore	A	E	EE	F	FB	FE	HL Standard type	HL Switch Set	KK	LF Standard type	LF Switch Set
φ32	25	□62	Rc1/4	15	φ6.6	62	81.5	88	M16×1.5	106.5	113
φ40	30	□70	Rc1/4	20	φ11	70	81.5	99	M20×1.5	111.5	129
φ50	35	□80	Rc1/4	20	φ14	85	82.5	98	M24×1.5	113.5	129
φ63	45	□94	Rc1/4	20	φ14	98	86	100	M30×1.5	119	133
φ80	60	□114	Rc3/8	25	φ18	118	101	118	M39×1.5	143	160

Symbol / Bore	MM	N	PJ Standard type	PJ Switch Set	PL	R	S	SL	TF	UF	WF	Y
φ32	φ18	0	47.5	54	12	40	14	7	80	95	10	22
φ40	φ22	7	47.5	65	12	46	19	7	96	118	10	22
φ50	φ28	7	49.5	65	12	58	24	8	108	135	11	21
φ63	φ36	0	54	68	12	65	30	9	124	150	13	20
φ80	φ45	0	64	81	15	87	41	14	154	185	17	22

LD/Foot type

160ST-1 6 LD [Bore] N [Stroke] − [A] 0

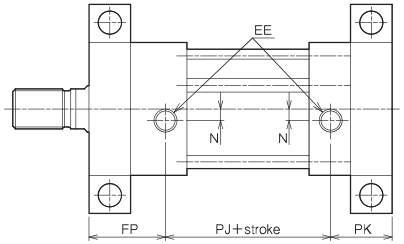

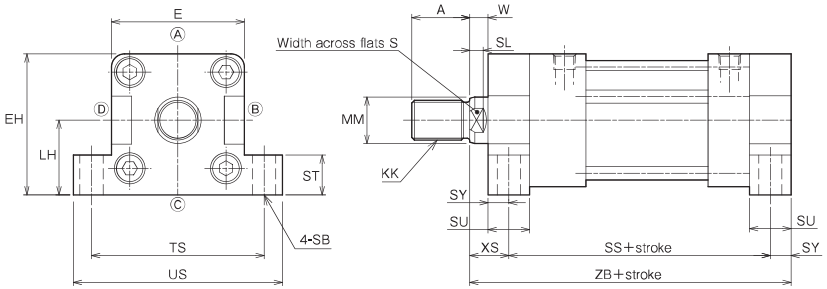

∗ The number and positions of tie rods vary depending on the bore.
∗ Since side load (eccentric load) must not be applied to the piston rod, take care when installing the cylinder.

Dimensional Table(LD/Foot type)

Symbol / Bore	A	E	EE	EH	FP	KK	LH	MM	N	PJ Standard type	PJ Switch Set
ϕ32	25	□62	Rc1/4	66	42	M16×1.5	35	ϕ18	0	47.5	54
ϕ40	30	□70	Rc1/4	72.5	42	M20×1.5	37.5	ϕ22	7	47.5	65
ϕ50	35	□80	Rc1/4	85	46	M24×1.5	45	ϕ28	7	49.5	65
ϕ63	45	□94	Rc1/4	97	45	M30×1.5	50	ϕ36	0	54	68
ϕ80	60	□114	Rc3/8	117	52	M39×1.5	60	ϕ45	0	64	81

Symbol / Bore	PK	S	SB	SL	SS Standard type	SS Switch Set	ST	SU	SY	TS	US	W
ϕ32	32	14	9	7	101.5	108	16	20	10	79	94	10
ϕ40	32	19	11	7	101.5	119	20	20	10	90	108	10
ϕ50	37	24	14	8	107.5	123	24	25	12.5	104	126	11
ϕ63	37	30	16	9	111	125	30	25	12.5	121	146	13
ϕ80	45	41	18	14	131	148	35	30	15	144	172	17

Symbol / Bore	XS	ZB Standard type	ZB Switch Set
ϕ32	20	131.5	138
ϕ40	20	131.5	149
ϕ50	23.5	143.5	159
ϕ63	25.5	149	163
ϕ80	32	178	195

Switch Set

160ST-1R 6 SA [Bore] N [Stroke] − [A] 0 [Sensor symbol] [Sensor quantity]

AX/AZ type (reed sensor/solid state sensor)

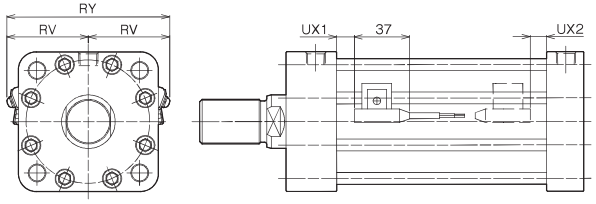

∗ The number and positions of tie rods vary depending on the bore.
∗ Since side load (eccentric load) must not be applied to the piston rod, take care when installing the cylinder.

Dimensional Table/Switch Set

Symbol / Bore	RV	RY	UX1	UX2
ϕ32	34	68	5	4
ϕ40	44	88	12	11
ϕ50	50	100	11	10
ϕ63	55	110	12	11
ϕ80	64	128	14	13
ϕ100	75	150	15	14
ϕ125	89	178	20	19
ϕ140	99	198	22	21
ϕ160	115	230	23	22

Operating Range and Hysteresis

Symbol / Bore	Reed sensor AX1∗∗ Operating range	Reed sensor AX1∗∗ Hysteresis	Solid state sensor AX2∗∗ Operating range	Solid state sensor AX2∗∗ Hysteresis
ϕ32	4 to 14	2 or less	3 to 8	1 or less
ϕ40				
ϕ50				
ϕ63				
ϕ80				
ϕ100	11 to 18		4 to 10	
ϕ125	5 to 15			
ϕ140	11 to 20		6 to 13	
ϕ160				

Lock Nut

The standard fitting length of the piston rod is about 80% of the thread diameter. If the fitting length is insufficient due to the use of the lock nut, it is necessary to increase the thread length (dimension A) as shown below.

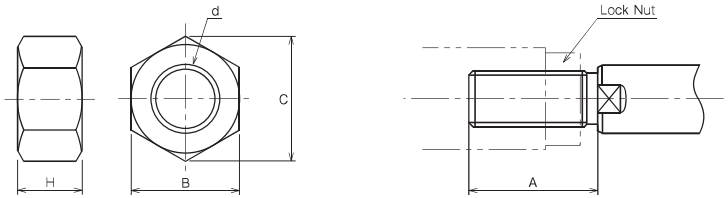

Dimensional Table/Lock nut

Symbol / Bore	Part number	B	C	d	H
ϕ32	LNH-16F-H	22	25.4	M16×1.5	10
ϕ40	LNH-20F-H	27	31.2	M20×1.5	12
ϕ50	LNH-24F-H	32	37.0	M24×1.5	14
ϕ63	LNH-30F-H	41	47.3	M30×1.5	17
ϕ80	LNH-39F-H	55	63.5	M39×1.5	20
ϕ100	LNH-48F-H	70	80.8	M48×1.5	26
ϕ125	LNH-64F-H	90	104.0	M64×2	35
ϕ140	LNH-72F-H	100	115.0	M72×2	38
ϕ160	LNH-80F-H	110	127.0	M80×2	43

Dimensional Table/Dimension A

Symbol / Bore	A
ϕ32	40
ϕ40	45
ϕ50	50
ϕ63	60
ϕ80	80
ϕ100	95
ϕ125	125
ϕ140	140
ϕ160	155

Change of Rod End Shape

■You can specify the shape and dimension of the rod end as shown below using the semi-standard symbols and dimension symbols. (No need to specify the dimension symbol if you order a cylinder with the basic dimension. Specify only the semi-standard symbol.)

How to order

Series | Model number | − X

Semi-standard symbol | Dimension symbol (Specify only when the dimension differs from the basic dimension.)

KM and KP need to be specified as a pair.

Example A83

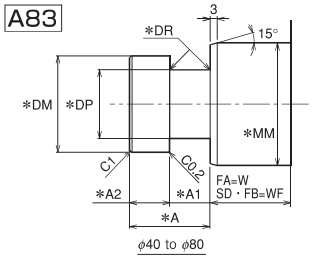

Note) In the case of this shape, specify the change of dimension WF only.

● Bore: ϕ40, rod end shape: A83, WF=60
160ST-1 6SA40N200-X A83
WF-60

Special Rod End Shapes

A00

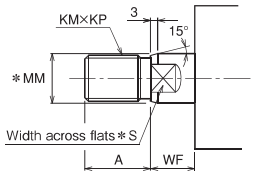

Table of Basic Dimensions (Standard dimensions)

Bore	A	KM	KP	*MM	*S	WF
ϕ32	25	16	1.5	ϕ18	14	10
ϕ40	30	20	1.5	ϕ22	19	10
ϕ50	35	24	1.5	ϕ28	24	11
ϕ63	45	30	1.5	ϕ36	30	13
ϕ80	60	39	1.5	ϕ45	41	17
ϕ100	75	48	1.5	ϕ56	50	26
ϕ125	95	64	2	ϕ70	65	30
ϕ140	110	72	2	ϕ80	75	35
ϕ160	120	80	2	ϕ90	85	40

A51

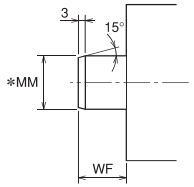

Table of Basic Dimensions

Bore	*MM	WF
ϕ32	ϕ18	10
ϕ40	ϕ22	10
ϕ50	ϕ28	11
ϕ63	ϕ36	13
ϕ80	ϕ45	17
ϕ100	ϕ56	26
ϕ125	ϕ70	30
ϕ140	ϕ80	35
ϕ160	ϕ90	40

A53

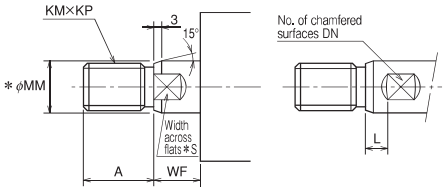

Note) Increase dimension WF by dimension L.

Table of Basic Dimensions

Bore	A	DN	KM	KP	L	*MM	*S	WF
ϕ32	25	2	16	1.5	0	ϕ18	14	10
ϕ40	30	2	20	1.5	0	ϕ22	19	10
ϕ50	35	2	24	1.5	0	ϕ28	24	11
ϕ63	45	2	30	1.5	0	ϕ36	30	13
ϕ80	60	2	39	1.5	0	ϕ45	41	17
ϕ100	75	2	48	1.5	0	ϕ56	50	26
ϕ125	95	2	64	2	0	ϕ70	65	30
ϕ140	110	2	72	2	0	ϕ80	75	35
ϕ160	120	2	80	2	0	ϕ90	85	40

● The *-marked dimensions are fixed.
● If it is necessary to change the fixed dimension, consult us.
● The number of chamfered surfaces DN is 2 (standard) or 4 only.

A54

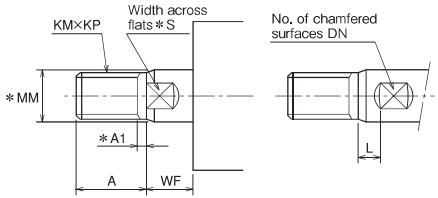

Table of Basic Dimensions

Bore	A	*A1	DN	KM	KP	L	*MM	*S	WF
ϕ32	25	4	2	16	1.5	0	ϕ18	14	10
ϕ40	30	4	2	20	1.5	0	ϕ22	19	10
ϕ50	35	4	2	24	1.5	0	ϕ28	24	11
ϕ63	45	4	2	30	1.5	0	ϕ36	30	13
ϕ80	60	4	2	39	1.5	0	ϕ45	41	17
ϕ100	75	4	2	48	1.5	0	ϕ56	50	26
ϕ125	95	5	2	64	2	0	ϕ70	65	30
ϕ140	110	5	2	72	2	0	ϕ80	75	35
ϕ160	120	5	2	80	2	0	ϕ90	85	40

A81

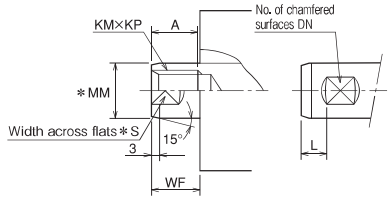

Table of Basic Dimensions

Bore	A	DN	KM	KP	L	*MM	*S	WF
ϕ32	15	2	12	1.75	0	ϕ18	14	10
ϕ40	20	2	16	2	0	ϕ22	19	10
ϕ50	24	2	20	2.5	0	ϕ28	24	11
ϕ63	33	2	27	3	0	ϕ36	30	13
ϕ80	36	2	30	3.5	0	ϕ45	41	17
ϕ100	45	2	39	4	0	ϕ56	50	26
ϕ125	58	2	48	5	0	ϕ70	65	30

A82

* Connecting accessories (M-end) are also available. (ϕ32 to ϕ80)

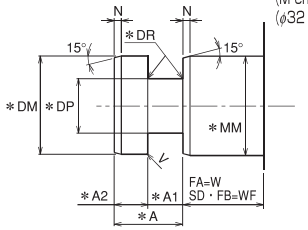

Table of Basic Dimensions

Bore	*A	*A1 $^{+0.5}_{+0.3}$	*A2 $^{-0.2}_{-0.3}$	*DM	*DP $^{-0.2}_{-0.3}$	*DR	*MM	*N	*V	W	WF
ϕ32	25	12.5	12.5	ϕ18	ϕ13	1	ϕ18	3	C0.2	30	30
ϕ40	25	12.5	12.5	ϕ22	ϕ16	1.5	ϕ22	3	C0.2	35	35
ϕ50	25	12.5	12.5	ϕ28	ϕ21	1.5	ϕ28	3	C0.2	35	35
ϕ63	30	15	15	ϕ36	ϕ26	2	ϕ36	3	C0.2	40	40
ϕ80	30	15	15	ϕ45	ϕ31	2	ϕ45	3	C0.2	45	45
ϕ100	40	20	20	ϕ56	ϕ38	3	ϕ56	3	C0.2	55	55
ϕ125	50	25	25	ϕ70	ϕ49	3.5	ϕ70	3	R1	60	60
ϕ140	50	25	25	ϕ80	ϕ56	4	ϕ80	3	R1	65	65
ϕ160	60	30	30	ϕ90	ϕ60	5	ϕ90	6	R1	70	70

A83

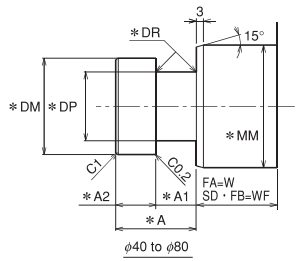

Table of Basic Dimensions

Bore	*A	*A1 $^{+0.5}_{+0.3}$	*A2 $^{-0.2}_{-0.3}$	*DM	*DP $^{-0.2}_{-0.3}$	*DR	*MM	W	WF
ϕ40	25	12.5	12.5	ϕ18	ϕ13	1	ϕ22	35	35
ϕ50	25	12.5	12.5	ϕ22	ϕ16	1.5	ϕ28	35	35
ϕ63	25	12.5	12.5	ϕ28	ϕ21	1.5	ϕ36	40	40
ϕ80	30	15	15	ϕ36	ϕ26	2	ϕ45	45	45

● The *-marked dimensions are fixed.
● If it is necessary to change the fixed dimension, consult us.
● The number of chamfered surfaces DN is 2 (standard) or 4 only.

Unit: mm

Separate flange joint (M-end): Only for rod end shape A82

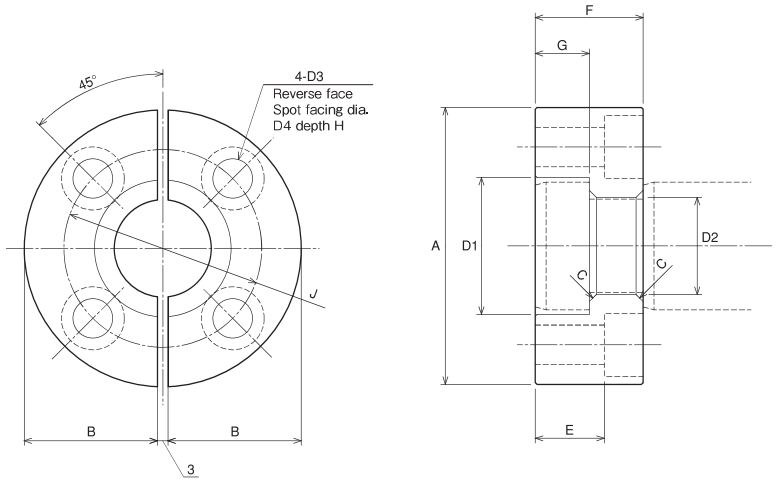

● Additional order must be made for this item. Specify as RMH-**.

Dimensional Table

Symbol / Bore	Part number	A	B	C	D1	D2	D3	D4	E	F	G	H	J
ϕ20	RMH-12	ϕ44	20.5	0.5	ϕ13	ϕ8.5	ϕ5.5	ϕ9.5	19.6	25	12.5	5.4	ϕ29
ϕ25	RMH-14	ϕ46	21.5	0.5	ϕ15	ϕ10.5	ϕ5.5	ϕ9.5	19.6	25	12.5	5.4	ϕ31
ϕ32	RMH-18	ϕ49	23	1	ϕ19	ϕ13.5	ϕ6.6	ϕ11	18.5	25	12.5	6.5	ϕ34
ϕ40	RMH-22	ϕ57	27	1.5	ϕ23	ϕ16.5	ϕ9	ϕ14	16.4	25	12.5	8.6	ϕ40
ϕ50	RMH-28	ϕ71	34	1.5	ϕ29	ϕ21.5	ϕ11	ϕ17.5	14.2	25	12.5	10.8	ϕ50
ϕ63	RMH-36	ϕ77	37	2	ϕ38	ϕ27	ϕ11	ϕ17.5	19.2	30	15	10.8	ϕ55
ϕ80	RMH-45	ϕ100	48.5	2	ϕ48	ϕ33	ϕ14	ϕ20	17	30	15	13	ϕ76

Short Tie Rod Hydraulic Cylinder 160ST-1